hoapp

Owner's Manual

Original Instructions

LUNA Inverter

Split Air Conditioner

- HMK-LA28VA
- HMK-LA38VA
- HMK-LA55VA
- HMK-LA67VA

CONTENTS

Safety precautions 01

Parts name 05

Installation notice 06

Installation of outdoor unit 08

Configuration of connection pipe 10

Test and operation 12

Specialist's Manual 13

Explanation of Symbols

⚠WARNING	This symbol indicates the possibility of death or serious injury.
⚠CAUTION	This symbol indicates the possibility of injury or damage to property.
NOTICE	Indicates important but not hazard-related information, used to indicate risk of property damage.

Exception Clauses

Manufacturer will bear no responsibilities when personal injury or property loss is caused by the following reasons.

1. Damage the product due to improper use or misuse of the product;
2. Alter, change, maintain or use the product with other equipment without abiding by the instruction manual of manufacturer;
3. After verification, the defect of product is directly caused by corrosive gas;
4. After verification, the defects are due to improper operation during transportation of product;
5. Operate, repair, maintain the unit without abiding by instruction manual or related regulations;
6. After verification, the problem or dispute is caused by the quality specification or performance of parts and components that produced by other manufacturers;
7. The damage is caused by natural calamities, bad using environment or force majeure.

If it needs to install, move or maintain the air conditioner, please contact dealer or local service center to conduct it at first. Air conditioner must be installed, moved or maintained by appointed unit. Otherwise, it may cause serious damage or personal injury or death.
When refrigerant leaks or requires discharge during installation, maintenance, or disassembly, it should be handled by certified professionals or otherwise in compliance with local laws and regulations.
This appliance is not intended for use by persons (including children) with reduced physical, sensory or mental capabilities or lack of experience and knowledge, unless they have been given supervision or instruction concerning use of the appliance by a person responsible for their safety.
Children should be supervised to ensure that they do not play with the appliance.

The refrigerant

Appliance filled with flammable gas R32.	Before install the appliance, read the installation manual first.
Before use the appliance, read the owner's manual first.	Before repair the appliance, read the service manual first.

- To realize the function of the air conditioner unit, a special refrigerant circulates in the system. The used refrigerant is the fluoride R32, which is specially cleaned. The refrigerant is flammable and inodorous. Furthermore, it can lead to explosion under certain conditions. But the flammability of the refrigerant is very low. It can be ignited only by fire.
- Compared to common refrigerants, R32 is a nonpolluting refrigerant with no harm to the ozonosphere. The influence upon the greenhouse effect is also lower. R32 has got very good thermodynamic features which lead to a really high energy efficiency. The units there fore need a less filling.

WARNING

Do not use means to accelerate the defrosting process or to clean, other than those recommended by the manufacture. Should repair be necessary, contact your nea rest authorized Service Centre. Any repairs carried out by unqualified personnel may be dangerous. The appliance shall be stored in a room without continuously operating ignition sources. (for example: open flames, an operating gas appliance or an operating electric heater.) Do not pierce or burn. Appliance shall be installed, operated and stored in a room with a floor area larger than X m^2.
(Please refer to table "a" in section of " Safety operation of flammable refrigerant " for space X.)
Appliance filled with flammable gas R32. For repairs, strictly follow manufacturer's instructions only. Be aware that refrigerants may not contain an odour. Read specialist's manual.

This appliance is not intended for use by persons (including children) with reduced physical, sensory or mental capabilities, or lack of experience and knowledge, unless they have been given supervision or instruction concerning use of the appliance by a person responsible for their safety.
Children should be supervised to ensure that they do not play with the appliance.

R32: 675
This marking indicates that this product should not be disposed with other house hold wastes. To prevent possible harm to the environment or human health from uncontrolled waste throughout the EU. To prevent possible harm to the environment or human health.
From uncontrolled waste disposal, recycle it responsibly to promote the sustainable reuse of material resources. To return your used device, please use the return and collection systems or contact the retailer where the product was purchased. They can take this product for environmental safe recycling.
If it needs to install, move or maintain the air conditioner, please contact dealer or local service center to conduct it at first. Air conditioner must be installed, moved or maintained by appointed unit. Otherwise, it may cause serious damage or personal injury or death.

Safety operation of flammable refrigerant

Qualification requirement for installation and maintenance man

- All the work men who are engaging in the refrigeration system should bear the valid certification awarded by the authoritative organization and the qualification for dealing with the refrigeration system recognized by this industry. If it needs other technician to maintain and repair the appliance, they should be supervised by the person who bears the qualification for using the flammable refrigerant.
- It can only be repaired by the method suggested by the equipment's manufacturer.

Safety operation of flammable refrigerant

Installation notes

- The air conditioner must be installed in a room that is larger than the minimum room area. The minimum room area is shown on the nameplate or following table a.
- It is not allowed to drill hole or burn the connection pipe.
- Leak test is a must after installation.

table a - Minimum room area (m^2)

Charge amount (kg)	floor location	window mounted	wall mounted	ceiling mounted
≤1.2	/	/	/	/
1.3	14.5	5.2	1.6	1.1
1.4	16.8	6.1	1.9	1.3
1.5	19.3	7	2.1	1.4
1.6	22	7.9	2.4	1.6
1.7	24.8	8.9	2.8	1.8
1.8	27.8	10	3.1	2.1
1.9	31	11.2	3.4	2.3
2	34.3	12.4	3.8	2.6
2.1	37.8	13.6	4.2	2.8
2.2	41.5	15	4.6	3.1
2.3	45.4	16.3	5	3.4
2.4	49.4	17.8	5.5	3.7
2.5	53.6	19.3	6	4

Maintenance notes

- Check whether the maintenance area or the room area meet the requirement of the nameplate.
  - It's only allowed to be operated in the rooms that meet the requirement of the nameplate.
- Check whether the maintenance area is well-ventilated.
  - The continuous ventilation status should be kept during the operation process.
- Check whether there is fire source or potential fire source in the maintenance area.
  - The naked flame is prohibited in the maintenance area; and the "no smoking" warning board should be hanged.
- Check whether the appliance mark is in good condition.
  - Replace the vague or damaged warning mark.

Welding

- If you should cut or weld the refrigerant system pipes in the process of maintaining, please follow the steps as below:
  a. Shut down the unit and cut power supply
  b. Eliminate the refrigerant
  c. Vacuuming
  d. Clean it with N_2 gas
  e. Cutting or welding
  f. Carry back to the service spot for welding
- The refrigerant should be recycled into the specialized storage tank.
- Make sure that there isn't any naked flame near the outlet of the vacuum pump and it's well-ventilated.

Filling the refrigerant

- Use the refrigerant filling appliances specialized for R32. Make sure that different kinds of refrigerant won't contaminate with each other.
- The refrigerant tank should be kept upright at the time of filling refrigerant.
- Stick the label on the system after filling is finished (or haven't finished).
- Don't overfilling.
- After filling is finished, please do the leakage detection before test running; another time of leak detection should be done when it's removed.

Safety instructions for transportation and storage

- Please use the flammable gas detector to check before unload and open the container.
- No fire source and smoking.
- According to the local rules and laws.

Safety precautions

WARNING

Installation

- Installation or maintenance must be performed by qualified professionals.
- The appliance shall be installed in accordance with national wiring regulations.
- According to the local safety regulations, use qualified power supply circuit and circuit breaker.
- All wires of indoor unit and outdoor unit should be connected by a professional.
- Be sure to cut off the power supply before proceeding any work related to electricity and safety.
- Make sure the power supply matches with the requirement of air conditioner.
- Unstable power supply or incorrect wiring may result in electric shock, fire hazard or malfunction. Please install proper power supply cables before using the air conditioner.
- The grounding resistance should comply with national electric safety regulations.
- Air Conditioner should be properly grounded. Incorrect grounding may cause electric shock.
- Do not put through the power before finishing installation.
- Do install the circuit breaker. If not, it may cause malfunction.
- An all-pole disconnection switch having a contact separation of at least 3mm in all poles should be connected in fixed wiring.
- Circuit breaker should be included magnet buckle and heating buckle function. It can protect the overload and circuit-short.

CAUTION

Installation

- Instructions for installation and use of this product are provided by the manufacturer.
- Select a location which is out of reach for children and far away from animals or plants. If it is unavoidable, please add the fence for safety purpose.
- The indoor unit should be installed close to the wall.
- Don't use unqualified power cord.
- If the length of power connection wire is insufficient, please contact the supplier for a new one.
- The appliance must be positioned so that the plug is accessible.
- For the air conditioner with plug, the plug should be reachable after finishing installation.
- For the air conditioner without plug, a circuit breaker must be installed in the line.
- The yellow-green wire in air conditioner is grounding wire, which can't be used for other purposes.
- The air conditioner is the first class electric appliance. It must be properly grounder with specialized grounding device by a professional. Please make sure it is always grounded effectively, otherwise it may cause electric shock.
- The temperature of refrigerant circuit will be high, please keep the interconnection cable away from the copper tube.

WARNING

Operation and Maintenance

- This appliance can be used by children aged from 8 years and above and persons with reduced physical, sensory or mental capabilities or lack of experience and knowledge if they have been given supervision or instruction concerning use of the appliance in a safe way and understand the hazards involved.
- Children shall not play with the appliance.
- Cleaning and user maintenance shall not be made by children without supervision.
- If the supply cord is damaged, it must be replaced by the manufacturer, its service agent or similarly qualified persons in order to avoid a hazard.
- Do not connect air conditioner to multi-purpose socket. Otherwise, it may cause fire hazard.
- Do disconnect power supply when cleaning air conditioner. Otherwise, it may cause electric shock.
- Do not wash the air conditioner with water to avoid electric shock.
- Do not spray water on indoor unit. It may cause electric shock or malfunction.
- Do not repair air conditioner by yourself. It may cause electric shock or damage. Please contact dealer when you need to repair air conditioner.
- After removing the filter, do not touch fins to avoid injury.
- Do not extend fingers or objects into air inlet or air outlet. It may cause personal injury or damage.

CAUTION

Operation and Maintenance

- Do not spill water on the remote controller, otherwise the remote controller may be broken.
- Do not use fire or hair dryer to dry the filter to avoid deformation or fire hazard.
- Do not block air outlet or air inlet. It may cause malfunction.
- Do not step on top panel of outdoor unit, or put heavy objects. It may cause damage or personal injury.
- When below phenomenon occurs, please turn off air conditioner and disconnect power immediately, and then contact the dealer or qualified professionals for service.
  - Power cord is overheating or damaged.
  - There's abnormal sound during operation.
  - Circuit breaker trips off frequently.
  - Air conditioner gives off burning smell.
  - Indoor unit is leaking.

Parts name

Outdoor Unit

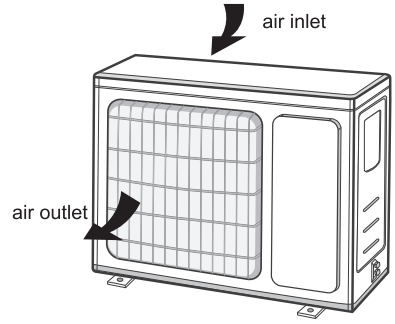

NOTE

- Actual product may be different from above graphics, please refer to actual product.

Installation notice

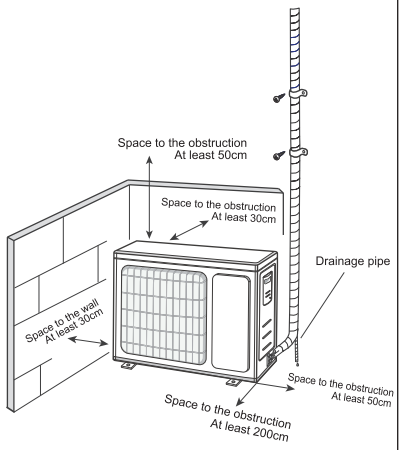

Safety precautions for installing and relocating the unit

To ensure safety, please be mindful of the following precautions.

WARNING

- **When installing or relocating the unit, be sure to keep the refrigerant circuit free from air or substances other than the specified refrigerant.**
  Any presence of air or other foreign substance in the refrigerant circuit will cause system pressure rise or compressor rupture, resulting in injury.
- **When installing or moving this unit, do not charge the refrigerant which is not comply with that on the nameplate or unqualified refrigerant.**
  Otherwise, it may cause abnormal operation, wrong action, mechanical malfunction or even serious safety accident.
- **When refrigerant needs to be recovered during relocating or repairing the unit, be sure that the unit is running in cooling mode. Then, fully close the valve at high pressure side (liquid valve). About 30-40 seconds later, fully close the valve at low pressure side (gas valve), immediately stop the unit and disconnect power. Please note that the time for refrigerant recovery should not exceed 1 minute.**
  If refrigerant recovery takes too much time, air may be sucked in and cause pressure rise or compressor rupture, resulting in injury.
- **During refrigerant recovery, make sure that liquid valve and gas valve are fully closed and power is disconnected before detaching the connection pipe.**
  If compressor starts running when stop valve is open and connection pipe is not yet connected, air will be sucked in and cause pressure rise or compressor rupture, resulting in injury.
- **When installing the unit, make sure that connection pipe is securely connected before the compressor starts running.**
  If compressor starts running when stop valve is open and connection pipe is not yet connected, air will be sucked in and cause pressure rise or compressor rupture, resulting in injury.
- **Prohibit installing the unit at the place where there may be leaked corrosive gas or flammable gas.**
  If there is leaked gas around the unit, it may cause explosion and other accidents.
- **Do not use extension cords for electrical connections. If the electric wire is not long enough, please contact a local service center authorized and ask for a proper electric wire.**
  Poor connections may lead to electric shock or fire.
- **Use the specified types of wires for electrical connections between the indoor and outdoor units. Firmly clamp the wires so that their terminals receive no external stresses.**
  Electric wires with insufficient capacity, wrong wire connections and insecure wire terminals may cause electric shock or fire.

Tools for installation

1. Level meter
2. Screw driver
3. Impact drill
4. Drill head
5. Pipe expander
6. Torque wrench
7. Open-end wrench
8. Pipe cutter
9. Leakage detector
10. Vacuum pump
11. Pressure meter
12. Universal meter
13. Inner hexagon spanner
14. Measuring tape

NOTICE

- Please contact the local agent for installation.
- Don't use unqualified power cold.

Selection of installation location

Basic requirement

Installing the unit in the following places may cause malfunction. If it is unavoidable, please consult the local dealer:

1. The place with strong heat sources, vapors, flammable or explosive gas, or volatile objects spread in the air.
2. The place with high-frequency devices (such as welding machine, medical equipment).
3. The place near coast area.
4. The place with oil or fumes in the air.
5. The place with sulfureted gas.
6. Other places with special circumstances.
7. The appliance shall not be installed in the laundry.
8. It's not allowed to be installed on the unstable or motive base structure (such as truck) or in the corrosive environment (such as chemical factory).

Outdoor unit

1. Select a location where the noise and outflow air emitted by the outdoor unit will not affect neighborhood.
2. The location should be well ventilated and dry, in which the outdoor unit won't be exposed directly to sunlight or strong wind.
3. The location should be able to withstand the weight of outdoor unit.
4. Make sure that the installation follows the requirement of installation dimension diagram.
5. Select a location which is out of reach for children and far away from animals or plants. If it is unavoidable, please add the fence for safety purpose.

Safety precaution

1. Must follow the electric safety regulations when installing the unit.
2. According to the local safety regulations, use qualified power supply circuit and air switch.
3. Make sure the power supply matches with the requirement of air conditioner. Unstable power supply or incorrect wiring or malfunction. Please install proper power supply cables before using the air conditioner.
4. Properly connect the live wire, neutral wire and grounding wire of power socket.
5. Be sure to cut off the power supply before proceeding any work related to electricity and safety.
6. Do not put through the power before finishing installation.
7. If the supply cord is damaged, it must be replaced by the manufacturer, its service agent or similarly qualified persons in order to avoid a hazard.

Requirements for electric connection

8. The temperature of refrigerant circuit will be high, please keep the interconnection cable away from the copper tube.
9. The appliance shall be installed in accordance with national wiring regulations.

Grounding requirement

1. The air conditioner is the first class electric appliance. It must be properly grounded with specialized grounding device by a professional. Please make sure it is always grounded effectively, otherwise it may cause electric shock.
2. The yellow-green wire in air conditioner is grounding wire, which can't be used for other purposes.
3. The grounding resistance should comply with national electric safety regulations.
4. The appliance must be positioned so that the plug is accessible.
5. An all-pole disconnection switch having a contact separation of at least 3mm in all poles should be connected in fixed wiring.

Air switch capacity

Including an air switch with suitable capacity, please note the following table. Air switch should be included magnet buckle and heating buckle function, it can protect the circuit-short and overload. (Caution: please do not use the fuse only for protecting the circuit)

Air-conditioner	Air switch capacity
55K, 67	16A

Installation of outdoor unit

Step 1:
Fix the support of outdoor unit (select it according to the actual installation situation)

1. Select installation location according to the house structure.
2. Fix the support of outdoor unit on the selected location with expansion screws.

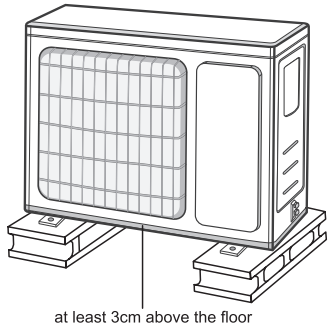

NOTICE

- Take sufficient protective measures when installing the outdoor unit.
- Make sure the support can withstand atleast fou r times of the unit weight.
- The outdoor unit should be installed at least 3cm above the floor in order to install drain joint. (for the model with heating tube, the installation height should be no less than 20cm.)
- For the unit with cooling capacity of 2300W~5000W, 6 expansion screws are needed; for the unit with cooling capacity of 6000W~8000W, 8 expansion screws are needed; for the unit with cooling capacity of 10000W~16000W, 10 expansion screws are needed.

Step 2:
Install drain joint (only for some models)

1. Connect the outdoor drain joint into the hole on the chassis, as shown in the picture below.
2. Connect the drain hose into the drain vent.

NOTICE

- As for the shape of drainage joint, please refer to the current product. Do not install the drainage joint in the severe cold area. Otherwise,it will be frosted and then cause malfunction.

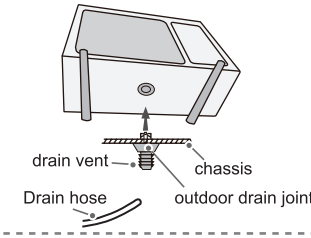

Step 3:
Fix outdoor unit

1. Place the outdoor unit on the support.
2. Fix the foot holes of outdoor unit with bolts.

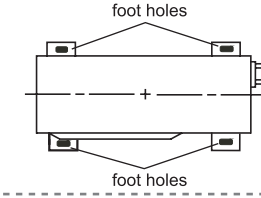

Step 4:
Connect indoor and outdoor pipes

1. Remove the screw on the right handle of outdoor unit and then remove the handle.

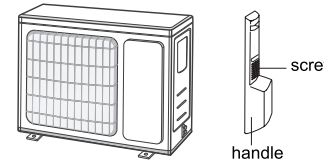

NOTE

- When there're multiple cables passing through it, the cross-hole of handle should be knocked off and eliminate the sharp burrs for avoid damaging the cables.
- Only applicable for some models.

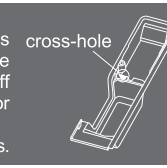

2. Remove the screw cap of valve and aim the pipe joint at the bellmouth of pipe.

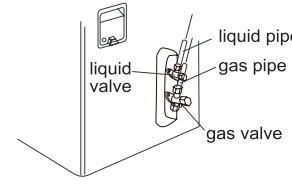

3. Pretighten the union nut with hand.

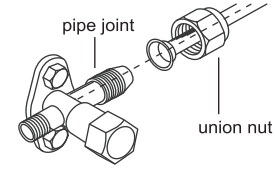

4. Tighten the union nut with torque wrench by referring to the sheet below.

Hex nut diameter	Tightening torque(N·m)
1/4"	15~20
3/8"	30~40
1/2"	45~55
5/8"	60~65
3/4"	70~75

Step 5:
Connect outdoor electric wire

1. Remove the wire clip; connect the power connection wire and signal control wire (only for cooling and heating unit) to the wiring terminal according to the color; fix them with screws.

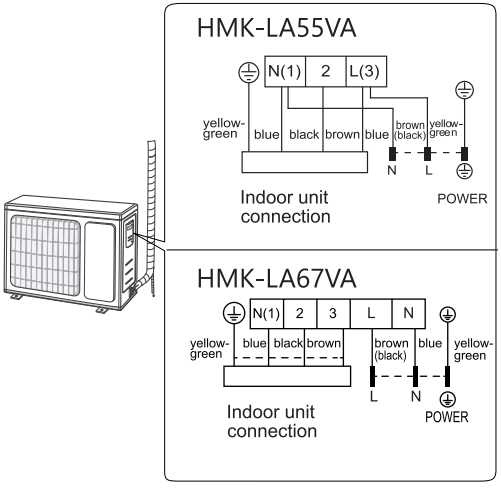

NOTICE
- The wiring board is for reference only, please refer to the actual one.

2. Fix the power connection wire and signal control wire with wire clip (only for cooling and heating unit).

NOTICE
- After tighten the screw, pull the power cord slightly to check if it is firm.
- Never cut the power connection wire to prolong or shorten the distance.

Step 6:
Neaten the pipes

1. The pipes should be placed along the wall, bent reasonably and hidden possibly. Min. semidiameter of bending the pipe is 10cm.
2. If the outdoor unit is higher than the wall hole, you must set a U-shaped curve in the pipe before pipe goes into the room, in order to prevent rain from getting into the room.

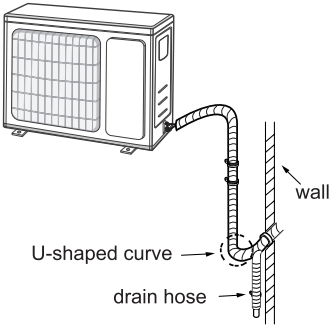

NOTICE
- The through-wall height of drain hose should not be higher than the outlet pipe hole of indoor unit.

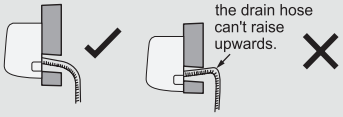

- The water outlet can't be placed in water in order to drain smoothly.

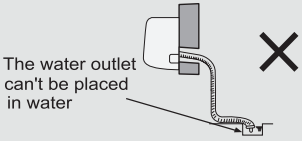

- Slant the drain hose slightly downwards. The drain hose can't be curved, raised and fluctuant, etc.

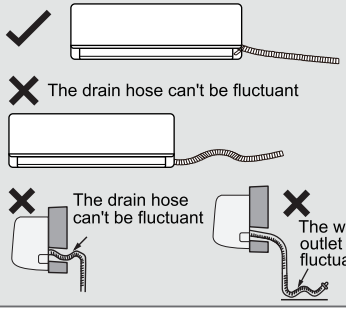

Configuration of connection pipe

1. Standard length of connection pipe: 5m.
2. Min. length of connection pipe.
   For the unit with standard connection pipe of 5m, there is no limitation for the min length of connection pipe.
3. Max. length of connection pipe is shown as below.

Max. length of connection pipe

Model	Max. length of connection pipe(m)
HMK-LA28VA	15
HMK-LA38VA	20
HMK-LA55VA	25
HMK-LA67VA	25

4. The calculation method of additional refrigerant charging amount after prolonging connection pipe.

   The calculation method of additional refrigerant charging amount (on the basis of liquid pipe):

   (1) Additional refrigerant charging amount= prolonged length of liquid pipe × additional refrigerant charging amount per meter

   (2) Basing on the length of standard pipe, add refrigerant according to the requirement as shown in the table. The additional refrigerant charging amount per meter is different according to the diameter of liquid pipe.
   See Sheet .

Additional refrigerant charging amount for R32

Model	Additional Charge g/m	Piping size	
		Liquid pipe	Gas pipe
HMK-LA28VA	16	1/4"	3/8"
HMK-LA38VA	20	1/4"	3/8"
HMK-LA55VA	16	1/4"	3/8"
HMK-LA67VA	16	1/4"	1/2"

Pipe expanding method

NOTICE

Improper pipe expanding is the main cause of refrigerant leakage. Please expand the pipe according to following steps:

A: Cut the pipe

- Confirm the pipe length according to the distance of indoor unit and outdoor unit.
- Cut the required pipe with pipe cutter.

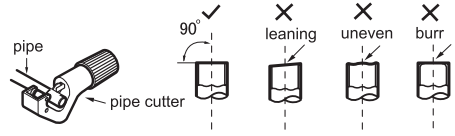

B: Remove the burrs

- Remove the burrs with shaper and prevent the burrs from getting into the pipe.

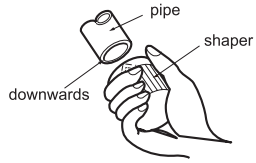

C: Put on suitable insulating pipe

D: Put on the union nut

- Remove the union nut on the indoor connection pipe and outdoor valve; install the union nut on the pipe.

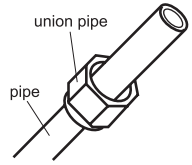

E: Expand the port

- Expand the port with expander.

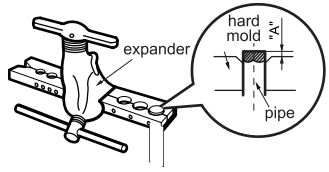

NOTICE

- "A" is different according to the diameter, please refer to the sheet below:

Outer diameter (mm)	A(mm)	
	Max	Min
Φ6 - 6.35(1/4")	1.3	0.7
Φ9 - 9.52(3/8")	1.6	1.0
Φ12-12.7(1/2")	1.8	1.0
Φ15.8-16(5/8")	2.4	2.2

F: Inspection

- Check the quality of expanding port. If there is any blemish, expand the port again according to the steps above.

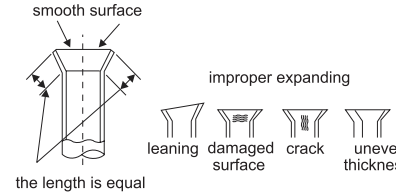

Working temperature range

	Indoor side DB/WB(°C)	Outdoor side DB/WB(°C)
Maximum cooling	32/23	43/26
Maximum heating	27/-	24/18

NOTE

- The operating temperature range (outdoor temperature)
  for cooling mode is -15°C ~ 43°C ;
  for heating mode is -15°C ~ 24°C .

Test and operation

Use vacuum pump

1. Remove the valve caps on the liquid valve and gas valve and the nut of refrigerant charging vent.
2. Connect the charging hose of gauge manifold to the refrigerant charging vent of gas valve and then connect the other charging hose to the vacuum pump.
3. Open the gauge manifold completely and operate for 10-15min to check if the pressure of gauge manifold remains in -0.1MPa.
4. Close the vacuum pump and maintain this status for 1-2min to check if the pressure of gauge manifold remains in -0.1MPa. If the pressure decreases, there may be leakage.
5. Remove the gauge manifold, open the valve core of liquid valve and gas valve completely with inner hexagon spanner.
6. Tighten the screw caps of valves and refrigerant charging vent.
7. Reinstall the handle.

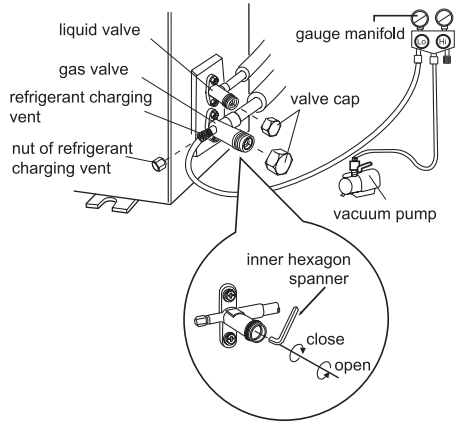

Leakage detection

1. With leakage detector:
   Check if there is leakage with leakage detector.
2. With soap water:
   If leakage detector is not available, please use soap water for leakage detection. Apply soap water at the suspected position and keep the soap water for more than 3min. If there are air bubbles coming out of this position, there's a leakage.

Check after installation

- Check according to the following requirement after finishing installation.

Items to be checked	Possible malfunction
Has the unit been installed firmly?	The unit may drop, shake or emit noise.
Have you done the refrigerant leakage test?	It may cause insufficient cooling(heating) capacity.
Is heat insulation of pipeline sufficient?	It may cause condensation and water dripping.
Is water drained well?	It may cause condensation and water dripping.
Is the voltage of power supply according to the voltage marked on the nameplate?	It may cause malfunction or damage the parts.
Is electric wiring and pipeline installed correctly?	It may cause malfunction or damage the parts.
Is the unit grounded securely?	It may cause electric leakage.
Does the power cord follow the specification?	It may cause malfunction or damage the parts.
Is there any obstruction in the air inlet and outlet?	It may cause insufficient cooling(heating) capacity.
The dust and sundries caused during installation are removed?	It may cause malfunction or damage the parts.
The gas valve and liquid valve of connection pipe are open completely?	It may cause insufficient cooling (heating) capacity.
Is the inlet and outlet of piping hole been covered?	It may cause insufficient cooling (heating) capacity or waste electricity.

Test operation

1. Preparation of test operation

- The client approves the air conditioner.
- Specify the important notes for air conditioner to the client.

2. Method of test operation

- Put through the power, press ON/OFF button on the remote controller to start operation.
- Press MODE button to select AUTO, COOL, DRY, FAN and HEAT to check whether the operation is normal or not.
- If the ambient temperature is lower than 16℃ ,the air conditioner can't start cooling.

- The following checks shall be applied to installations using flammable refrigerants:
  – the charge size is in accordance with the room size within which the refrigerant containing parts are installed;
  – the ventilation machinery and outlets are operating adequately and are not obstructed;
  – if an indirect refrigerating circuit is being used, the secondary circuit shall be checked for the presence of refrigerant;
  – marking to the equipment continues to be visible and legible. Markings and signs that are illegible shall be corrected;
  – refrigeration pipe or components are installed in a position where they are unlikely to be exposed to any substance which may corrode refrigerant containing components, unless the components are constructed of materials which are inherently resistant to being corroded or are suitably protected against being so corroded.
- Repair and maintenance to electrical components shall include initial safety checks and component inspection procedures. If a fault exists that could compromise safety, then no electrical supply shall be connected to the circuit until it is satisfactorily dealt with. If the fault cannot be corrected immediately but it is necessary to continue operation, an adequate temporary solution shall be used. This shall be reported to the owner of the equipment so all parties are advised.
- Initial safety checks shall include:
  – that capacitors are discharged: this shall be done in a safe manner to avoid possibility of sparking;
  – that no live electrical components and wiring are exposed while charging, recovering or purging the system;
  – that there is continuity of earth bonding.
- Checking for presence of refrigerant
  The area shall be checked with an appropriate refrigerant detector prior to and during work, to ensure the technician is aware of potentially toxic or flammable atmospheres. Ensure that the leak detection equipment being used is suitable for use with all applicable refrigerants, i.e. non-sparking, adequately sealed or intrinsically safe.
- Presence of fire extinguisher
  If any hot work is to be conducted on the refrigeration equipment or any associated parts, appropriate fire extinguishing equipment shall be available to hand. Have a dry powder or CO_2 fire extinguisher adjacent to the charging area.
- Ventilated area
  Ensure that the area is in the open or that it is adequately ventilated before breaking into the system or conducting any hot work. A degree of ventilation shall continue during the period that the work is carried out. The ventilation should safely disperse any released refrigerant and preferably expel it externally into the atmosphere.
- Checks to the refrigeration equipment
  Where electrical components are being changed, they shall be fit for the purpose and to the correct specification. At all times the manufacturer's maintenance and service guidelines shall be followed. If in doubt, consult the manufacturer's technical department for assistance.
- Checks to electrical devices
  – that capacitors are discharged: this shall be done in a safe manner to avoid possibility of sparking;
  – that no live electrical components and wiring are exposed while charging, recovering or purging the system.
- Repairs to sealed components
  During repairs to sealed components, all electrical supplies shall be disconnected from the equipment being worked upon prior to any removal of sealed covers, etc. If it is absolutely necessary to have an electrical supply to equipment during servicing, then a permanently operating form of leak detection shall be located at the most critical point to warn of a potentially hazardous situation.
  Particular attention shall be paid to the following to ensure that by working on electrical components, the casing is not altered in such a way that the level of protection is affected. This shall include damage to cables, excessive number of connections, terminals not made to original specification, damage to seals, incorrect fitting of glands, etc.
  – Ensure that the apparatus is mounted securely.
  – Ensure that seals or sealing materials have not degraded to the point that they no longer serve the purpose of preventing the ingress of flammable atmospheres. Replacement parts shall be in accordance with the manufacturer's specifications.
  NOTE:The use of silicon sealant can inhibit the effectiveness of some types of leak detection equipment. Intrinsically safe components do not have to be isolated prior to working on them.

- Repair to intrinsically safe components

Do not apply any permanent inductive or capacitance loads to the circuit without ensuring that this will not exceed the permissible voltage and current permitted for the equipment in use.
Intrinsically safe components are the only types that can be worked on while live in the presence of a flammable atmosphere. The test apparatus shall be at the correct rating.
Replace components only with parts specified by the manufacturer. Other parts may result in the ignition of refrigerant in the atmosphere from a leak.

- Cabling

Check that cabling will not be subject to wear, corrosion, excessive pressure, vibration, sharp edges or any other adverse environmental effects. The check shall also take into account the effects of aging or continual vibration from sources such as compressors or fans.

- Detection of flammable refrigerants

Under no circumstances shall potential sources of ignition be used in the searching for or detection of refrigerant leaks. A halide torch (or any other detector using a naked flame) shall not be used.

- Leak detection methods

Leak detection fluids are suitable for use with most refrigerants but the use of detergents containing chlorine shall be avoided as the chlorine may react with the refrigerant and corrode the copper pipe-work.

- Decommissioning

Before carrying out this procedure, it is essential that the technician is completely familiar with the equipment and all its detail. It is recommended good practice that all refrigerants are recovered safely. Prior to the task being carried out, an oil and refrigerant sample shall be taken in case analysis is required prior to re-use of reclaimed refrigerant. It is essential that electrical power is available before the task is commenced.
a) Become familiar with the equipment and its operation.
b) Isolate system electrically.
c) Before attempting the procedure, ensure that:
– mechanical handling equipment is available, if required, for handling refrigerant cylinders;
– all personal protective equipment is available and being used correctly;
– the recovery process is supervised at all times by a competent person;
– recovery equipment and cylinders conform to the appropriate standards.
d) Pump down refrigerant system, if possible.
e) If a vacuum is not possible, make a manifold so that refrigerant can be removed from various parts of the system.
f) Make sure that cylinder is situated on the scales before recovery takes place.
g) Start the recovery machine and operate in accordance with manufacturer's instructions.
h) Do not overfill cylinders. (No more than 80% volume liquid charge).
i) Do not exceed the maximum working pressure of the cylinder, even temporarily.
j) When the cylinders have been filled correctly and the process completed, make sure that the cylinders and the equipment are removed from site promptly and all isolation valves on the equipment are closed off.
k) Recovered refrigerant shall not be charged into another refrigeration system unless it has been cleaned and checked.

- Labelling

Equipment shall be labelled stating that it has been de-commissioned and emptied of refrigerant. The label shall be dated and signed. For appliances containing flammable refrigerants, ensure that there are labels on the equipment stating the equipment contains flammable refrigerant.

- Recovery

When removing refrigerant from a system, either for servicing or decommissioning, it is recommended good practice that all refrigerants are removed safely.
When transferring refrigerant into cylinders, ensure that only appropriate refrigerant recovery cylinders are employed. Ensure that the correct number of cylinders for holding the total system charge are available. All cylinders to be used are designated for the recovered refrigerant and labelled for that refrigerant (i.e. special cylinders for the recovery of refrigerant). Cylinders shall be complete with pressure-relief valve and associated shut-off valves in good working order. Empty recovery cylinders are evacuated and, if possible, cooled before recovery occurs.
The recovery equipment shall be in good working order with a set of instructions concerning the equipment that is at hand and shall be suitable for the recovery of all appropriate refrigerants including, when applicable, flammable refrigerants. In ad-

dition, a set of calibrated weighing scales shall be available and in good working order. Hoses shall be complete with leak-free disconnect couplings and in good condition. Before using the recovery machine, check that it is in satisfactory working order, has been properly maintained and that any associated electrical components are sealed to prevent ignition in the event of a refrigerant release. Consult manufacturer if in doubt.

The recovered refrigerant shall be returned to the refrigerant supplier in the correct recovery cylinder, and the relevant waste transfer note arranged. Do not mix refrigerants in recovery units and especially not in cylinders.

If compressors or compressor oils are to be removed, ensure that they have been evacuated to an acceptable level to make certain that flammable refrigerant does not remain within the lubricant. The evacuation process shall be carried out prior to returning the compressor to the suppliers. Only electric heating to the compressor body shall be employed to accelerate this process. When oil is drained from a system, it shall be carried out safely.

NFORMATION CONCERNING USED REFRIGERANT MEDIUM
This unit is containing fluorinated gases included in the Kyoto protocol.
The maintenance and the liquidation must be carried out by qualified personnel.
Type of refrigerant: R32
The quantity of the refrigerant: please see the unit label.
The value GWP: 675 (1 kg R32 = 0,675 t CO2 eq) GWP = Global Warming Potential
Appliance filled with flammable gas R32.
In case of quality problem or other please contact your local supplier or authorized service center.
Emergency number: 112

PRODUCER
Climatek network s.r.o.
Evropská 259/33b, Dejvice, 16000, Praha 6 Czech Republic
www.climateknet.com
This product was manufactured in China (Made in China).

REPRESENTATIVE
Climatek network s.r.o.
Evropská 259/33b, Dejvice, 16000, Praha 6 Czech Republic

TECHNICAL SUPPORT
Climatek network s.r.o.
Evropská 259/33b, Dejvice, 16000, Praha 6 Czech Republic
Tel.: +420 705 869358
www.climateknet.com
info@climateknet.com

CE